KERN & Sohn GmbH

KERN OZB-A5213

Version 1.0
07/2024

imLab
SCIENTIFIC EQUIPMENT
FOR LABORATORY & INDUSTRY

Web contact
www.imlab.eu
info@imlab.eu

Phone
+33(0)3 20 55 19 11
+32(0)16 73 55 72

1. Fix the clamp to a flat surface.

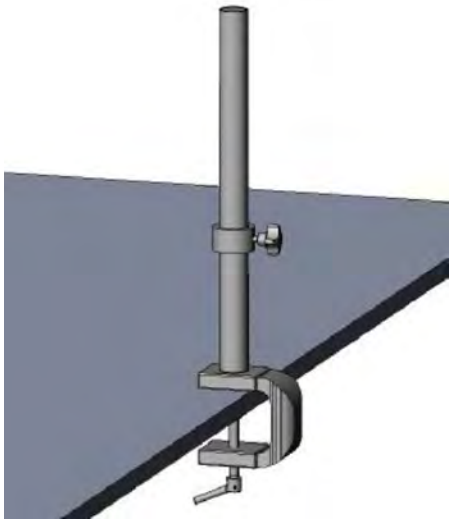

2. Install the U3 cross arm onto the column.

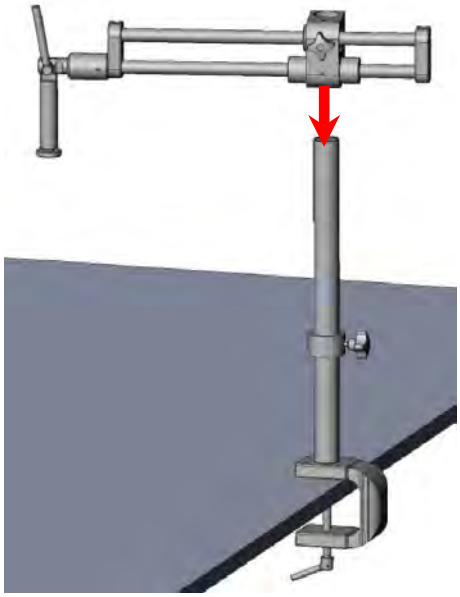
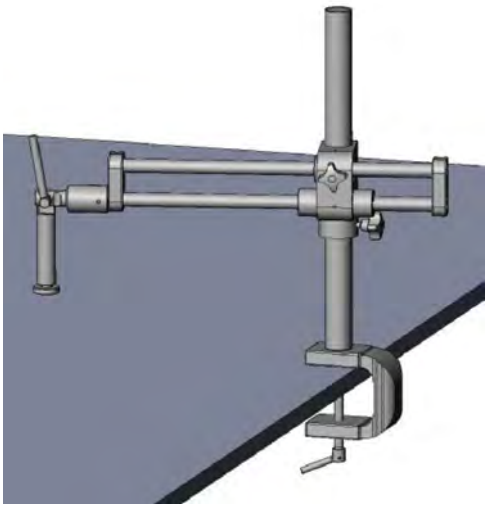
3.The finished product is as shown below after installation.