**Sauter GmbH**

# Datasheet / User manual

## SAUTER CS P2

V. 1.0
02/2020
GB

PROFESSIONAL MEASURING

CS P2-BA-e-2010.docx

imLab
SCIENTIFIC EQUIPMENT
FOR LABORATORY & INDUSTRY
Web contact
www.imlab.eu
info@imlab.eu
Phone
+33(0)3 20 55 19 11
+32(0)16 73 55 72

GB

# SAUTER CS P2

V. 1.0 02/2020

**Datasheet / User manual**

Summarize:


**1 Short description ..... 3**

**2 Available models ..... 3**

**3 Introduction ..... 3**

**4 Warning notes ..... 3**

**5 Warranty ..... 4**

**6 Detailed specifications ..... 4**

**7 Wiring ..... 5**

**8 Dimension in mm ..... 5**

**8.1 50kg bis 250kg ..... 5**

**8.2 0,5t bis 7,5t ..... 6**

**9 Certificate of Compliance ..... 6**

# 1 Short description

- stainless steel IP68 (acc. to EN 60529) “S” type load cell
- Force measuring compatible
- RoHS conform
- Suitable for hanging, hopper and other weighing devices
- Suitable for testing facilities and test stands
- Accuracy OIML R60 C3
- Option on request: EX, Accuracy C4

# 2 Available models

| Capacity | Model |
|---|---|
| 50kg (≈500N) | CS 50-3P2 |
| 100kg (≈1kN) | CS 100-3P2 |
| 250kg (≈2,5kN) | CS 250-3P2 |
| 500kg (≈5kN) | CS 500-3P2 |
| 1t (≈10kN) | CS 1000-3P2 |
| 2t (≈20kN) | CS 2000-3P2 |
| 5t (≈50kN) | CS 5000-3P2 |
| 7.5t (≈75kN) | CS 7500-3P2 |

# 3 Introduction

Please pay attention to the notes of the operating manual: read these operating manual carefully before commissioning, even if you already have experience with SAUTER measuring cells.

After receiving the measuring cell, it should be checked in advance whether no transport damage has occurred, whether the outer packaging or other parts or even the article itself has been damaged. If any damage is evident, please inform SAUTER GmbH immediately.

# 4 Warning notes

Observe the national accident prevention regulations.

Not correct executed use of the measuring cell can lead to serious injuries, death, material damage and personal injuries. Use only by trained and experienced people.

Never load more than the max. capacity to a measuring cell. Overloaded measuring cells no longer have the required accuracy. Overloaded or deformed measuring cells are no longer allowed to use and must be changed quickly.

Never step under suspended loads.

Always fasten overload- or break security to your construction.

Pay attention to the allowed static and dynamic loads of the used equipment.

Let the measuring cells calibrate at regular intervals.

Only load the measuring cell in its specified load direction. Avoid lateral forces.

Control the measuring cells to deformations and cracks.

Measuring cells with 4-Conductor cable will change their characteristic value when shortened or extended the cable length.

## 5 Warranty

The warranty expires at:

- Disregard of the specifications of the operating manual
- Modification or opening the measuring cell
- Overload
- Mechanical damages
- Damage caused by liquids or media
- Natural loss
- Not correct installation

## 6 Detailed specifications

| | | | |
|---|---|---|---|
| Output sensitivity (FS) | mV/V | 2.0 ± 0.008 | 2.0 ± 0.004 |
| Maximum capacity ( Emax ) | kg | 50, 100, 250 | 500, 1000, 2000, 5000, 7500 |
| Max.number of load cell intervals | nLC | 3000 | |
| Ratio of min. LC verification interval | Y = Emax / vmin | 7500 | 12000 |
| Combined Error | %FS | ≤± 0.023 | |
| Minimum dead load | Of Emax | 0% | |
| Safe overload | of Emax | 150 % | |
| Ultimate overload | of Emax | 300 % | |
| Zero balance | of FS | < ± 1.5 % | |
| Excitation, recommended voltage | V | 5 ~ 12 | |
| Excitation maximum | V | 18 | |
| Input resistance | Ω | 350 ± 3 | |
| Output resistance | Ω | 355 ± 3 | |
| Insulation resistance | MΩ | ≥5000 ( at 50VDC ) | |
| Compensated temperature | °C | -10 ~+40 | |
| Operating temperature | °C | -35 ~ +65 | |
| Storage temperature | °C | -40 ~ +70 | |

# 7 Wiring

Shielded, 4 conductor cable. Cable diameter: Ø5mm. Shield not connected to element.
Cable length: 6m

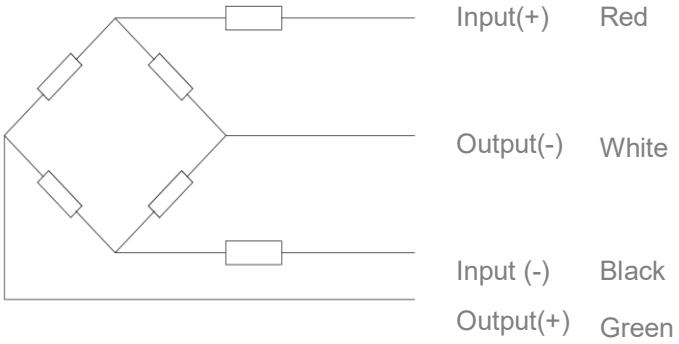


# 8 Dimension in mm

## 8.1 50kg bis 250kg

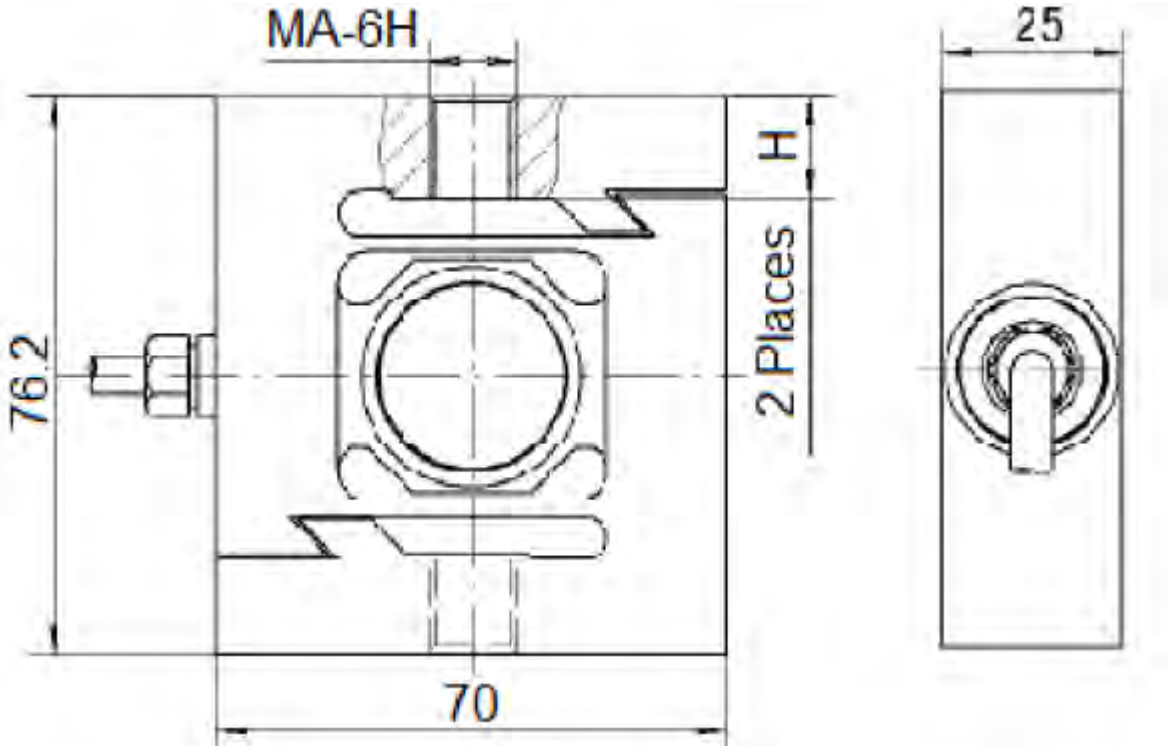


| Dimension / Capacity | H | M |
|---|---|---|
| 50kg; 100kg | 13 | M8 |
| 250kg | 14 | M12 x 1,75 |

### 8.2 0,5t bis 7,5t

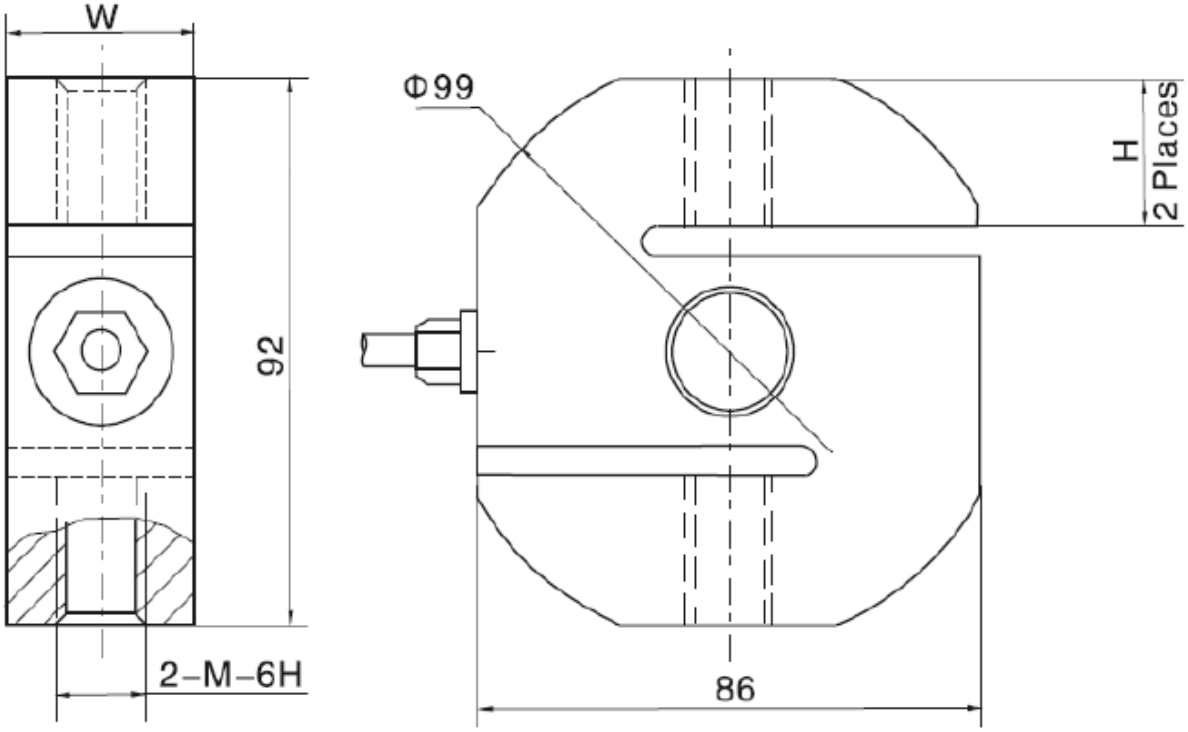


| Dimension / Capacity | W | H | M |
|---|---|---|---|
| 0,5t; 1t | 32 | 25 | M12 x 1.75 |
| 2t | 32 | 25 | M20 x 1.5 |
| 5t; 7,5t | 50 | 24 | M24 x 2 |

## 9 Certificate of Compliance

The Certificate of Compliance can be downloaded from the website www.sauter.eu